D.C. Circuits

1 Objectives

1. To determine the resistance of resistors using (a) a multimeter, and (b) Ohm's Law,
2. To verify the equivalent resistance formulae for series and parallel resistor combinations, and
3. To calculate voltage drop and current draw in series and parallel resistor combinations.

2 Introduction

According to Ohm's Law the electric current in an ohmic conductor is directly proportional to the potential difference (or voltage drop) between the ends of the conductor. Thus, if V is the potential difference between the ends of the conductor, and the current through the conductor is I, then

$$V = IR \ ,$$

where the constant of proportionality, R, is known as the resistance. The resistance of an Ohmic conductor depends mildly on temperature.

The voltage drop across a resistor is caused by the dissipation of power in the resistor itself. Normally, this power dissipation manifests as heat (known as ohmic heating). The power dissipated is the product of the voltage drop and the current draw

$$P = VI = I^2 R = \frac{V^2}{R} \ .$$

There is a certain maximum power draw, P_{max}, that real resistors can safely dissipate without an undue temperature rise, and correspondingly, a maximum safe current, I_{max}, which the resistor can handle without overheating. The previous equation gives

$$I_{\text{max}} = \sqrt{\frac{P_{\text{max}}}{R}} \ ,$$

where P_{max} is the maximum rated power. Resistors used in this laboratory have $P_{\text{max}} = 1\,\text{W}$; resistors in consumer electronics are typically rated for $1/10\,\text{W}$ or less, while industrial power resistors with multi-kW ratings are also available.

(a) Axial lead

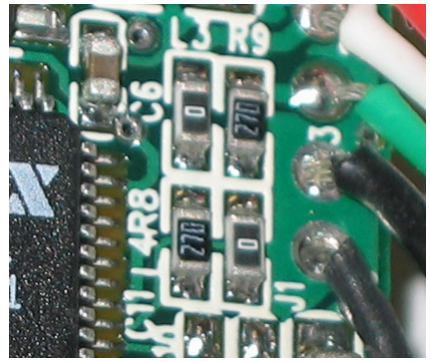

(b) Surface mount

Figure 1: The left hand figure shows a standard axial lead resistor (the resistor leads emerge along the axis, hence the name). The color code is clearly visible (see Table 1); the displayed resistor has a value of $330 \pm 5\% \,\Omega$. The right hand figure shows modern "surface mount device", or SMD resistors. They are *not* color coded, but instead typically have a numerical value code written on them. In this image, we see $0\,\Omega$ (aka "jumpers") and two $27\,\Omega$ resistors.

Band Color	Value	Band Color	Value
Black	0	Green	5
Brown	1	Blue	6
Red	2	Violet	7
Orange	3	Gray	8
Yellow	4	White	9

(a) Value Band Codes

Band Color	Tolerance [%]
Brown	1
Red	2
Gold	5
Silver	10
None	20

(b) Common Tolerance Band Codes

Table 1: The resistance value (in Ohms) of axial lead resistors are indicated directly on the resistor by a series of color coded bands (see Figure 1a). The typical resistor code is a four or five band code, in a form that resembles scientific or engineering notation: for a resistor with n bands, the first $n-2$ bands (starting with the band nearest a lead) are the mantissa, the $n-1$st band is the exponent, and the last band is the *tolerance*. A four band code gives $c_1c_2 \times 10^{c_3}\Omega \pm c_4\%$; for example, brown-brown-black-gold is $11 \times 10^0\Omega \pm 5\% = 11\Omega \pm 5\%$. Resistors are not generally available in all possible combinations of values; you can't, for instance, buy a 50Ω resistor of any tolerance, but you can buy a 49.9Ω or a 51Ω resistor.

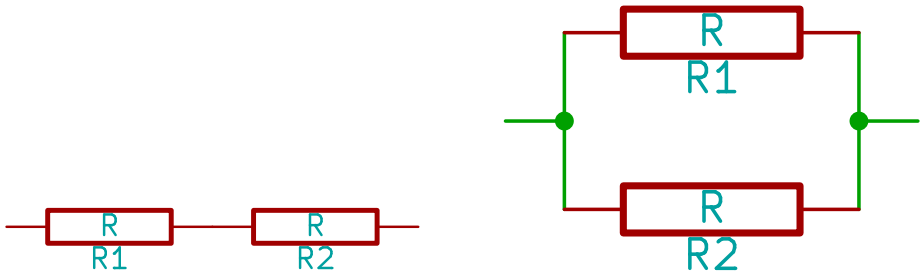

(a) Series (b) Parallel

Figure 2: Series and parallel resistor configurations.

The resistors we will use are the classic "carbon composite axial lead" type; while particularly convenient for this lab, they are not used much anymore, except in niche applications. For modern consumer or high precision electronics, however, they are both too inaccurate, and too large to use. The convenience factor for hands-on work is great: they are large enough for you to measure and manipulate by hand, they are labeled with a standard color banding code (Table 1) and they are easy to attach to a board via hand soldering.

3 Theory

When two or more resistors are connected in a circuit, they can always be replaced with an *equivalent resistor* that has the same effect as the individual resistors. In fact, from the point of view of the power supply, which can only see the global properties of the circuit (resistance, and a few others we will discuss later in the semester), the entire circuit can be reduced to a single equivalent resistance. To perform these replacements, however, we must know the rules to apply. For series combined resistors, as shown in Figure 2a, the equivalent resistance is the sum of all the individual resistances:

$$R_S = R_1 + R_2 + R_3 + \cdots = \sum_i R_i \ .$$

This is because the same current must pass through each resistor. For parallel combined resistors, as shown in Figure 2b, the inverse of the equivalent resistance is the sum of the inverses of the individual resistances:

$$\frac{1}{R_P} = \frac{1}{R_1} + \frac{1}{R_2} + \frac{1}{R_3} + \cdots = \sum_i \frac{1}{R_i} \ .$$

In this case, the voltage drop across all of the resistors must be the same, so the total current is divided between all the resistors according to Ohm's Law. The current in a given *branch* of the parallel circuit is inversely proportional to the resistance of that branch.

More complicated combinations of resistors can often be reduced to "nested" collections of parallel and series resistances. For instance, in the circuit in Figure 3, the effective resistance of all five resistors can be determined first by combining the three parallel resistors R_3, R_4, and R_5, into a single effective resistance R_P, and then combining the three series resistors R_1, R_2, and R_P into a single effective resistance R_S.

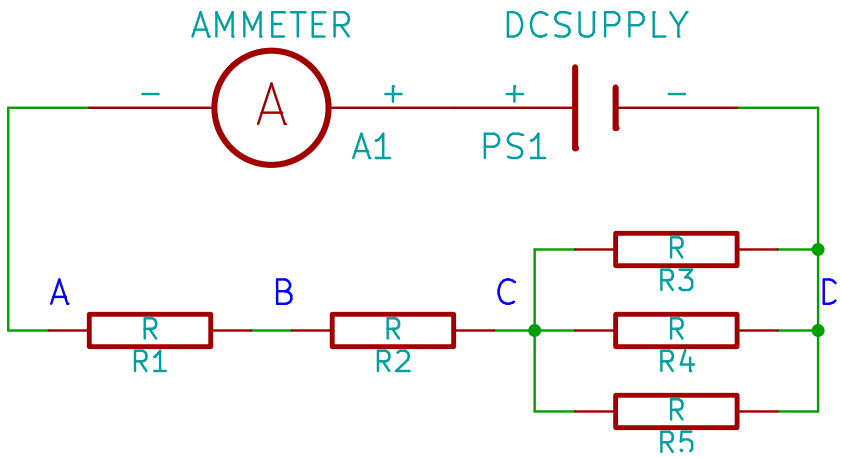

Figure 3: The circuit used to test the parallel and series resistance combinations.

4 Procedures

In this lab, we will work with premounted, 1 W resistors, a power supply, and a pair of multimeters.

1. Choose five resistors from the board and find their resistances and tolerances using the color code described in Table 1.

2. Configure one of the multimeters to measure resistance, then measure the resistances of the five resistors you chose in the previous step by using the meter. Are the measured values within the stated tolerances?

3. Calculate the maximum safe current for each resistor, $I_{i,\max}$; the current in each resistor must be kept below this maximum safe value. In later steps, you must make sure that the power supply does not drive more than the maximum safe current through any of the resistors.

4. Build the circuit shown in Figure 3. In this experiment, the ammeter has two purposes: (a) To ensure that the current remains constant throughout the measurements, and (b) To ensure that you don't exceed the maximum safe current through any resistor.

5. Determine a safe operating voltage for this circuit. Calculate the maximum safe voltage using Ohm's Law and the series and parallel resistance formulae. Set the power supply voltage below this value, and then check (by touching!) each connected resistor to make sure it isn't getting hot!

6. Set the second multimeter to read DC Voltage. Measure and record the potential difference across the power supply. Then, measure the potential difference across each of the resistors.

7. Next, set the second multimeter to read DC Current. Measure and record the current passing through each of the five resistors. You should make sure that the current passing through the first ammeter stays constant throughout your measurements!

8. Remove the meters and power supply from the circuit. Measure and record the resistance between the following sets of points: AD, AC, BD, and CD. You've already measured the values of the individual resistors; do your measurements of the parallel and series combinations match with predictions?

Pre-Lab Exercises

Answer these questions as instructed on Blackboard; make sure to submit them before your lab session!

1. What is the safe operating voltage for a $100\,\Omega$, $1/10\,\mathrm{W}$ resistor? The maximum current? How much power is dissipated at half the maximum voltage?

2. What is the resistance of an ideal voltmeter? Do you connect a voltmeter in series or parallel with the potential drop you are trying to measure?

3. What is the resistance of an ideal ammeter? Do you connect an ammeter in series or parallel with the current draw you are trying to measure?

4. Write an expression for the equivalent resistance of three parallel resistors. What about three series resistors?

5. If a resistor is banded Red-Blue-Green-Silver, what are the minimum and maximum resistance values in the tolerance range?

Post-Lab Exercises

1. For the five resistors in your measurement, tabulate the following data: (a) the nominal resistance given by the color code, (b) the nominal tolerance, (c) the direct multimeter measurement of their values, (d) the percent difference between the nominal and measured resistance, and (e) the maximum safe current. How did you define the percent difference? Are all of the measured values equal to the nominal values within tolerance?

2. Tabulate the voltage drop across, and current through, each of your resistors. From these data, derive the resistance of each resistor. Do these derived values match the directly measured values in your first table?

3. In the last step of the procedure, you measured a number of different series and parallel combinations of resistors. Using the individual measured resistor values, predict these combinations. Do your predictions match the measurements? Why or why not?

4. The voltage drops around a closed loop must equal zero. The circuit studied here forms a closed loop; the power supply *raises* the voltage, while the voltage drops around the circuit reduce the voltage. Do these sum to zero in this experiment? Why or why not?

5. Due to charge conservation, the current leaving the positive terminal of the power supply must return to the negative terminal. Does your circuit satisfy these requirements? How can you tell?

6. Energy conservation demands that the power delivered to the circuit by the power supply must equal the power dissipated in the circuit. Tabulate the total power delivered and the power dissipated in each resistor. Are they equal?

7. Discuss briefly whether you have met the objectives of the lab exercises.